ProBUILD

Week 1

Index

Sr. No.	CONTENTS
1	ASSIGNMENT1_1
2	ASSIGNMENT1_2
3	ASSIGNMENT1_3

Assignment1_1

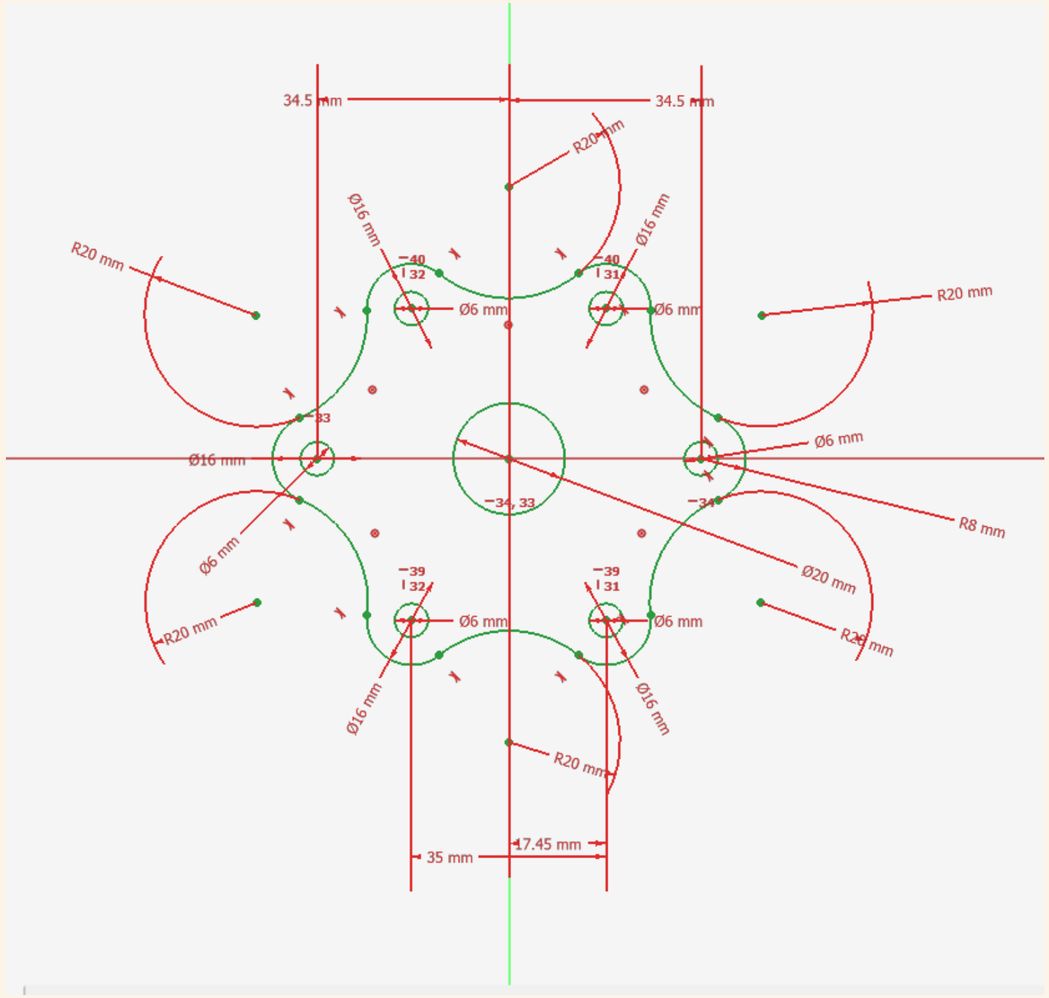

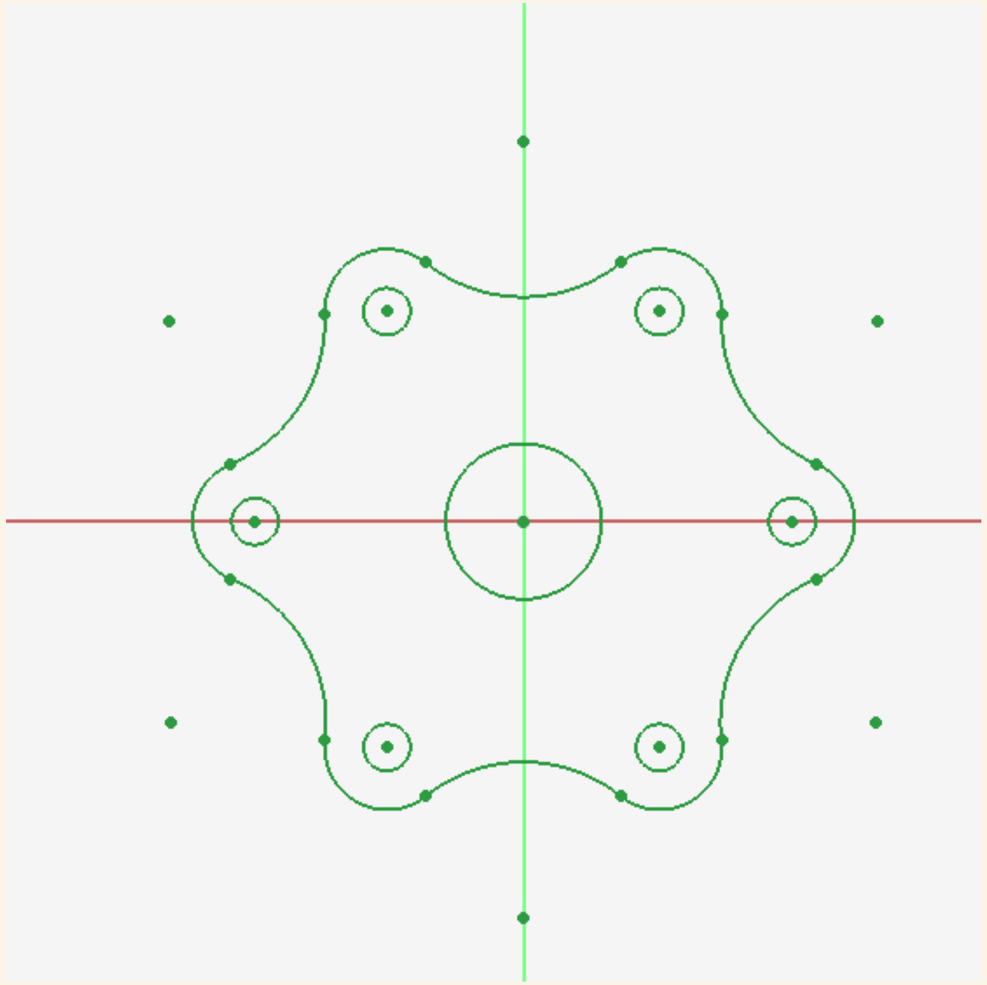

Assignment1_1

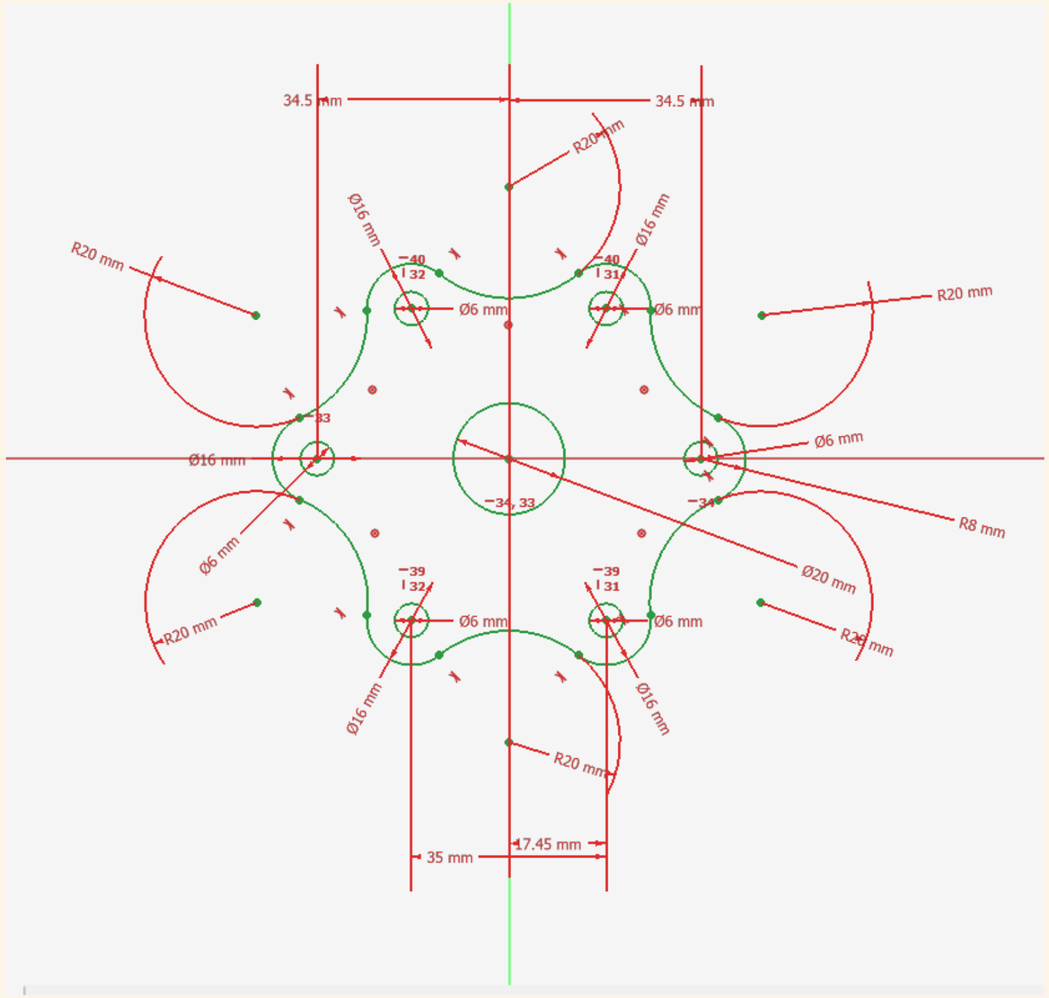

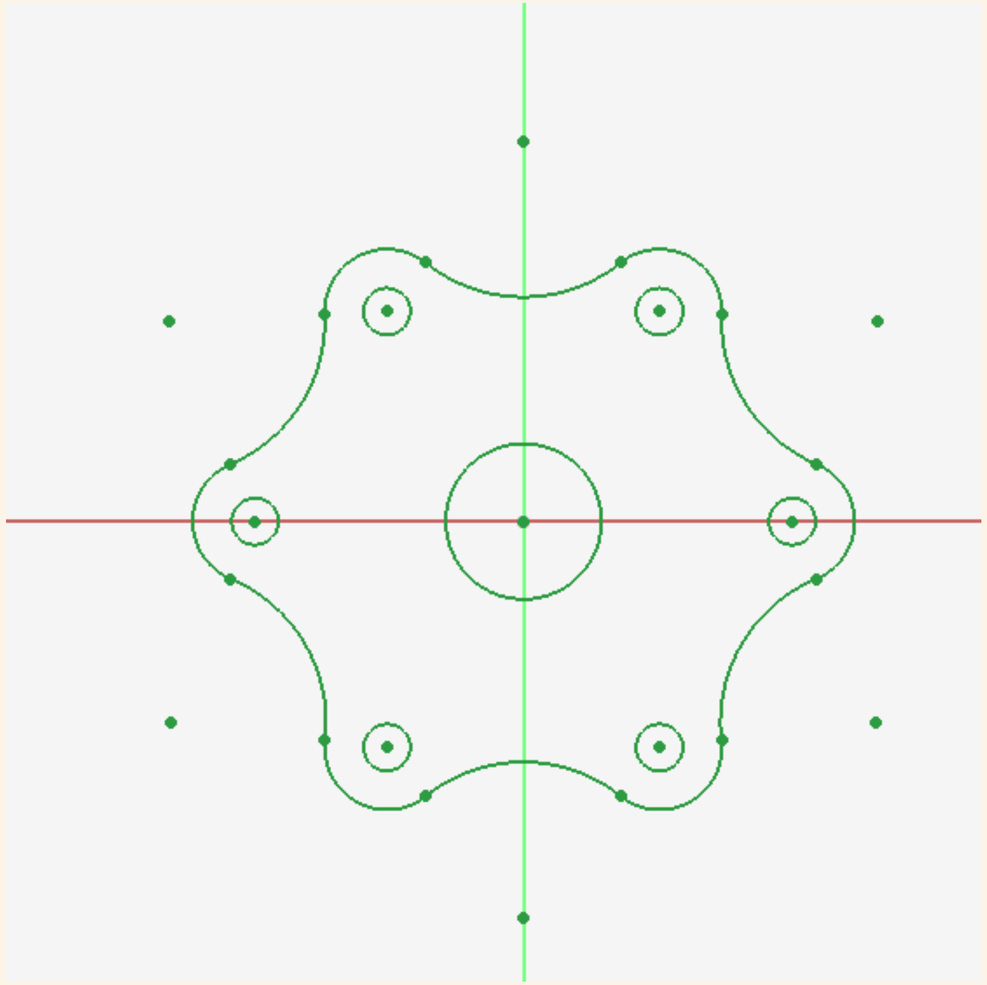

Assignment1_2

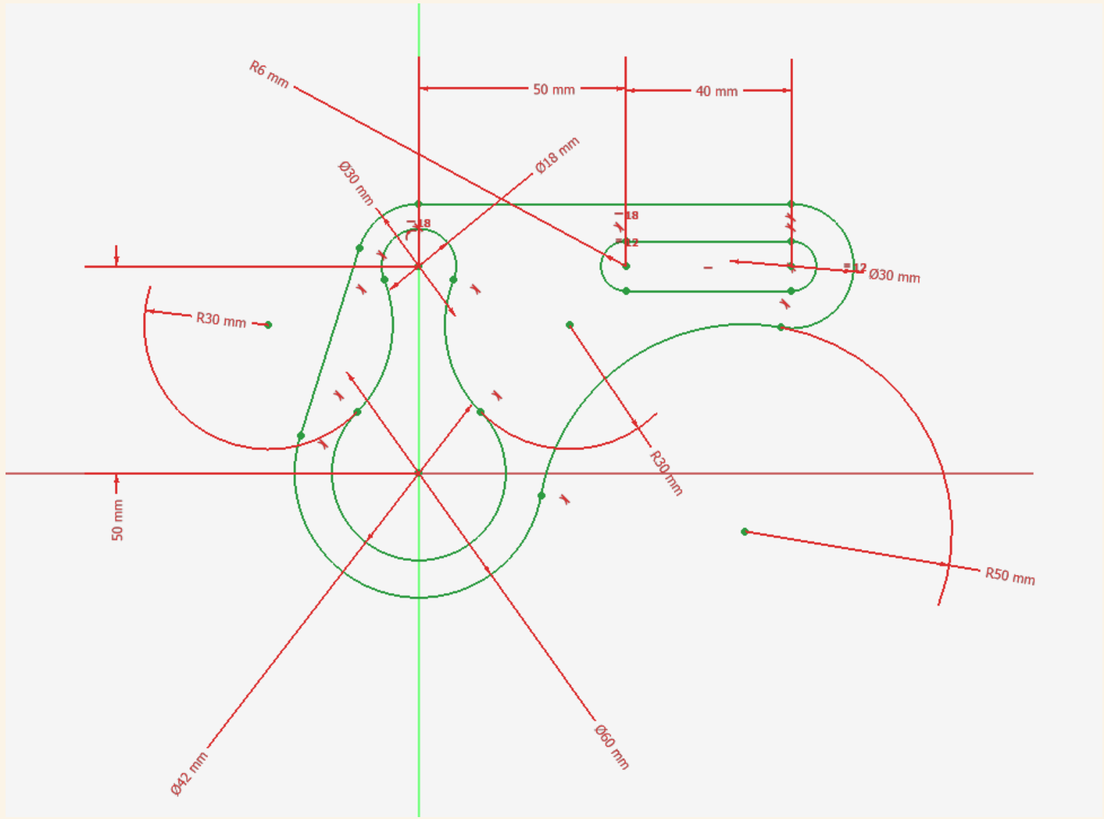

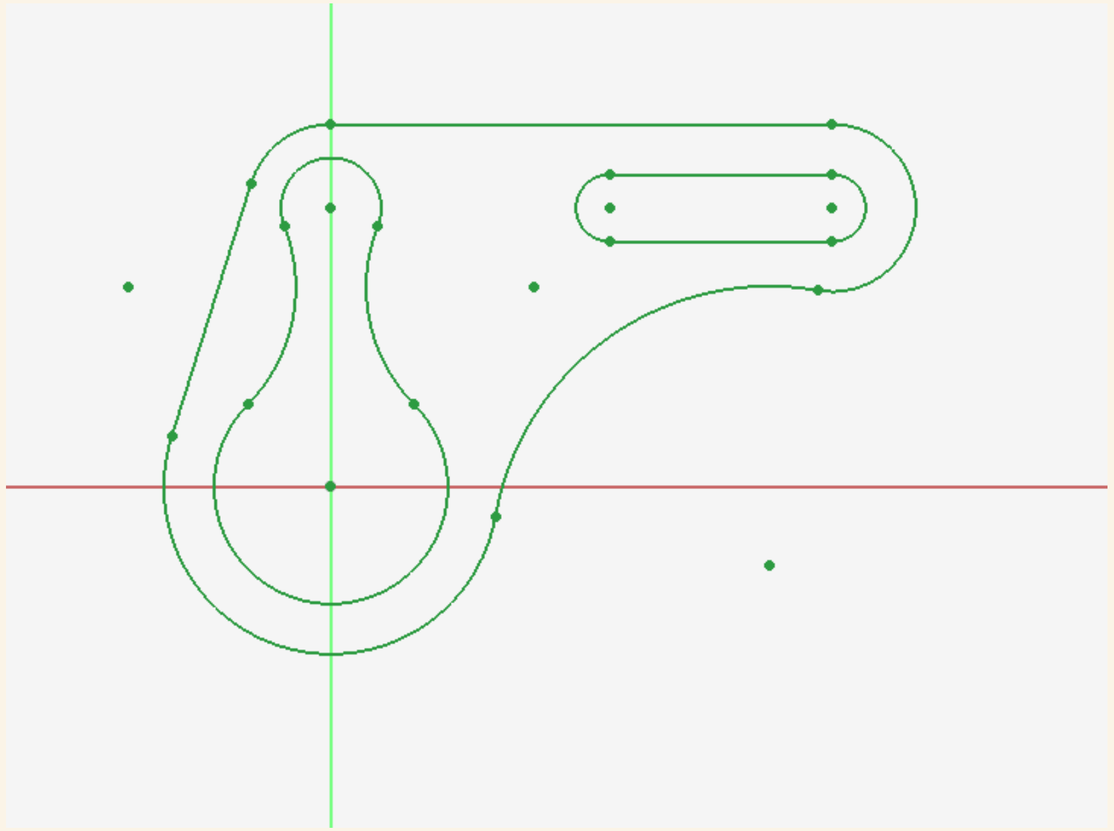
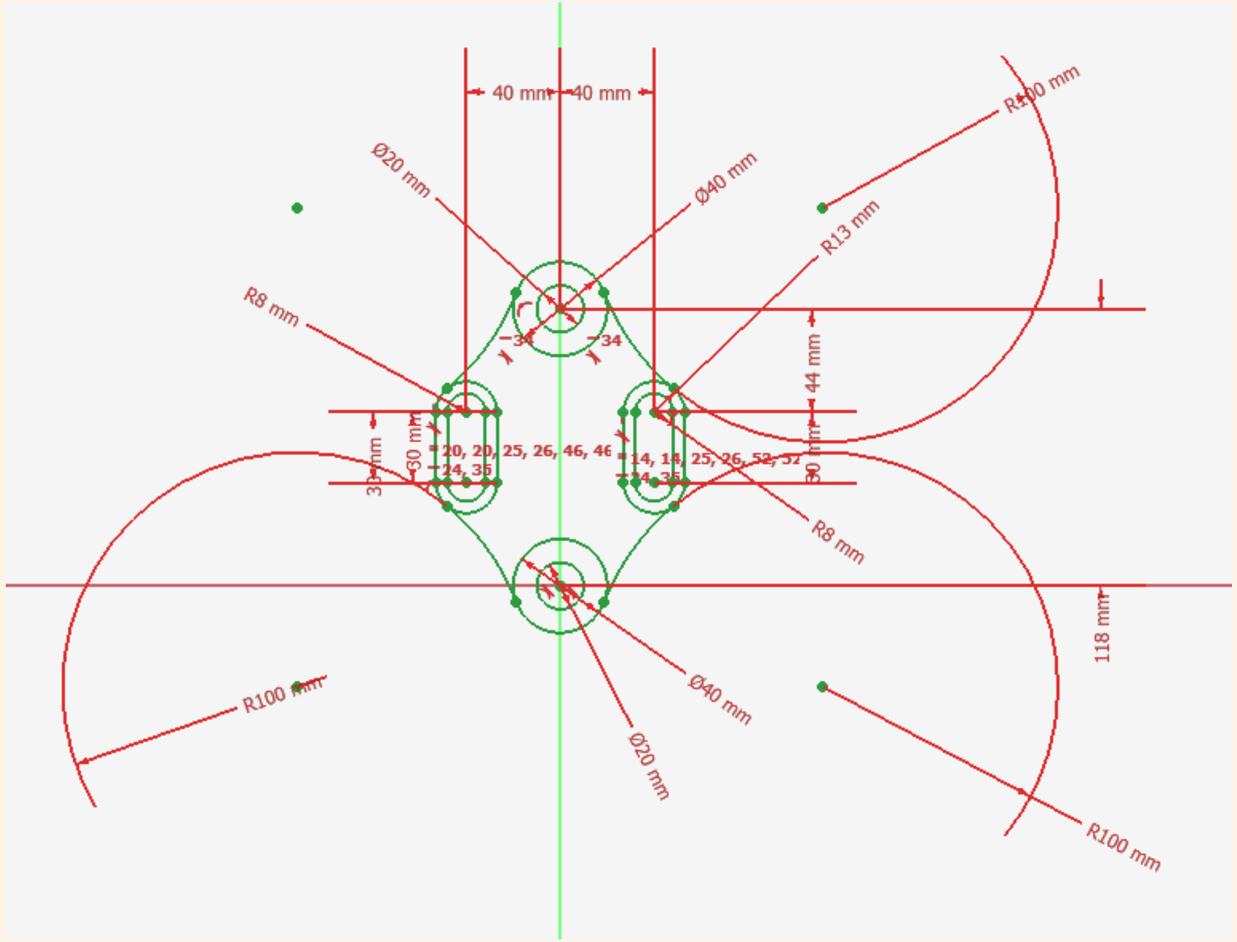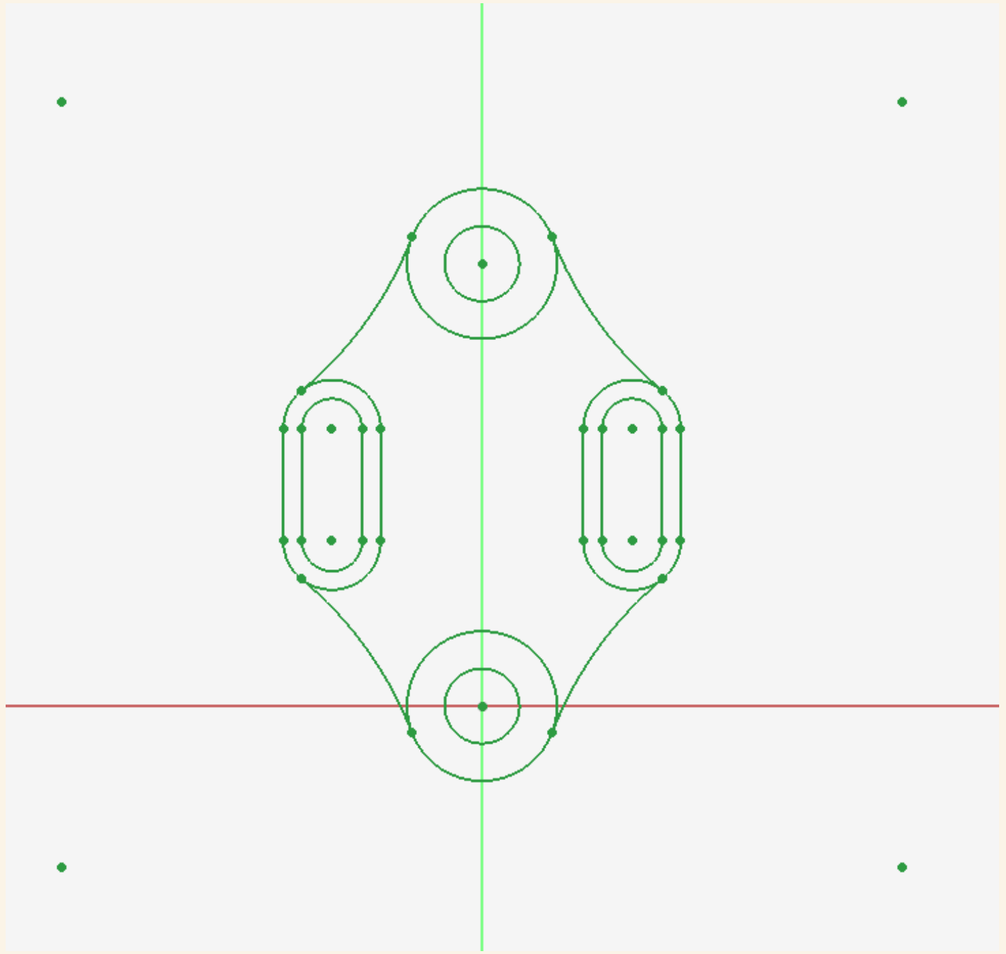
Assignment1_3